SECTION (1:25)

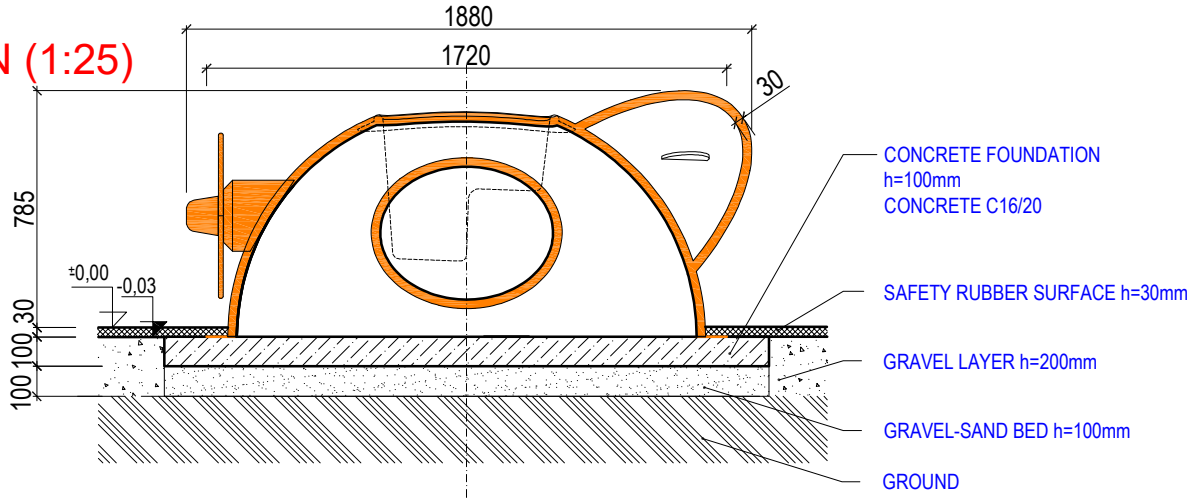

FOUNDATION GROUND PLAN (1:25)

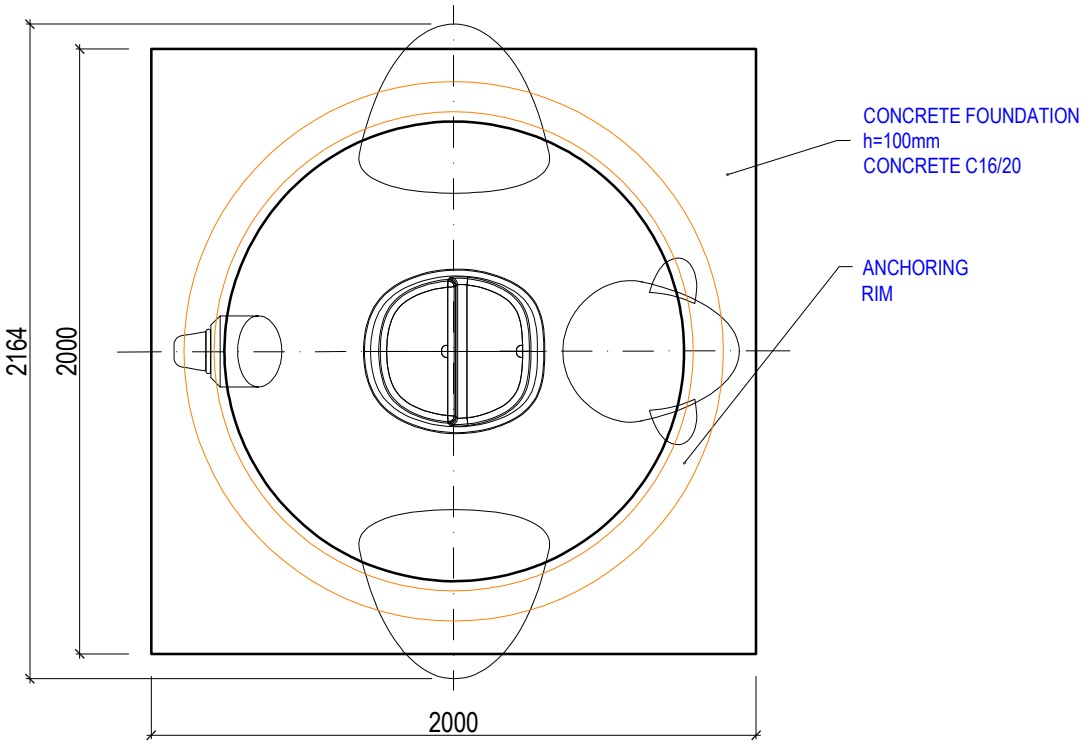

ANCHORING DETAIL (1:10)

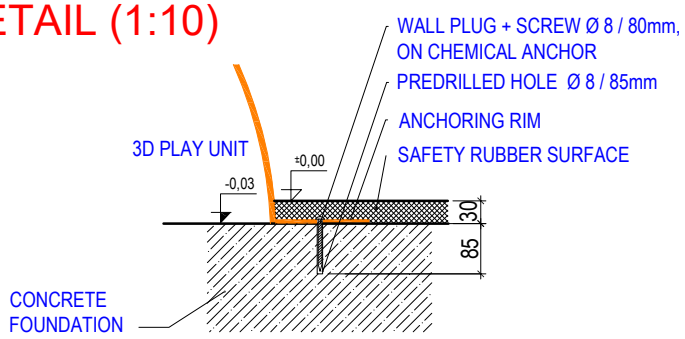

Author:		3D PROGRAM, s.r.o. Objízdná 1911 765 02 Otrokovice, Czech Republic Tel: +420 602 500 045 Email: info@3dprogram.eu	
MgA. Daniel Naď			
TECHNICAL DRAWING		Certified according to	EN71 , EN1176
		Date of issue	17.2.2023
E18se - PLANE WITH SEAT		M 1:25, 1:10	format 1xA4
Foundation and anchoring - ground plan and section		E18se_EN.dwg	revision 0